24"W LEFT HINGED ACID STORAGE CABINET

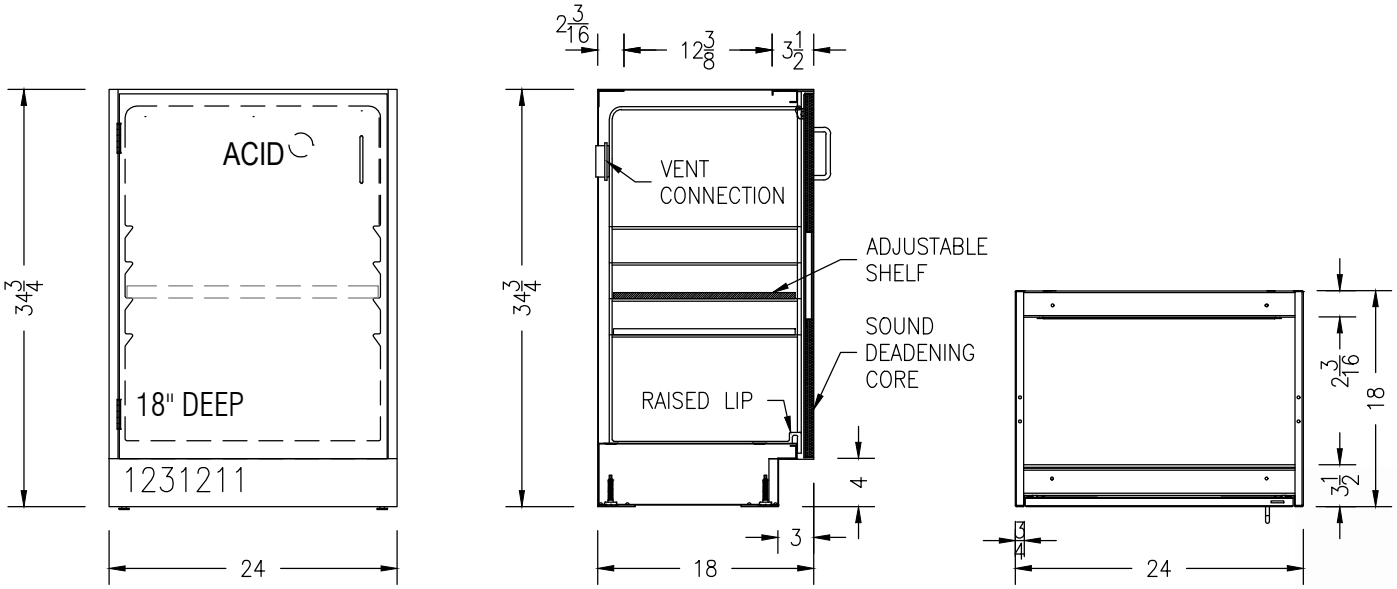

- ALUMINUM WIRE PULLS
- STAINLESS STEEL 5-KNUCKLE HINGES
- ADJUSTABLE LEVELING FEET WITH UP TO 1.5" OF ADJUSTMENT
- SOUND DEADENING CORE INSIDE DOOR FRONTS
- SINGLE PIECE WHITE MOLDED POLYETHYLENE TUB LINER CABINET INSERT WITH RADIUSED CORNERS FOR EASY CLEANING
- 1" RAISED FRONT LIP FOR SPILL CONTAINMENT
- BACK OF DOOR IS POLYETHYLENE LINED WITH A PLASTIC ROLLER CATCH
- (1) $\frac{3}{4}$" THICK BLACK PHENOLIC ADJUSTABLE SHELF
- VENT KIT FOR FUME HOOD INCLUDED
- COLOR: WARM GRAY WITH RED "ACID" LETTERING

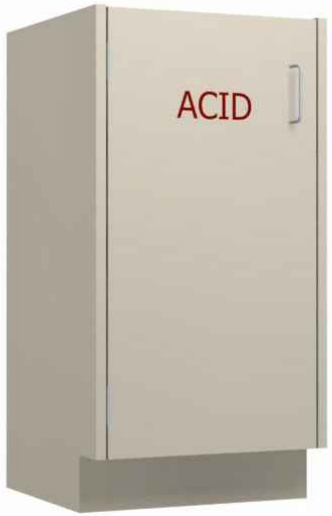

CABINET GAUGES	
20 GAUGE	DOOR LINERS, REMOVABLE BACKS
18 GAUGE	CABINET GABLES, TOPS, BOTTOMS, TOEKICKS, OUTER DOOR FRONT PANELS
16 GAUGE	TOP AND INTERMEDIATE CHANNELS, BASE CABINET REAR RAIL
14 GAUGE	HINGE PLATES, BASE CABINET TOP RAIL
11 GAUGE	CABINET LEVELER SUPPORT

NEL direct
online industrial & laboratory furniture
F 888.635.2949 | www.newenglandlabdirect.com

1231211

09/08/15

* DISCLAIMER: THIS DOCUMENT IS INTENDED FOR GENERAL INFORMATION ONLY. CHANGES MAY OCCUR WITHOUT NOTICE AT THE DISCRETION OF NEW ENGLAND LAB DIRECT