30"X 72 " CAMBRIDGE Q SERIES LAB TABLE WITH 1" BLACK EPOXY TOP

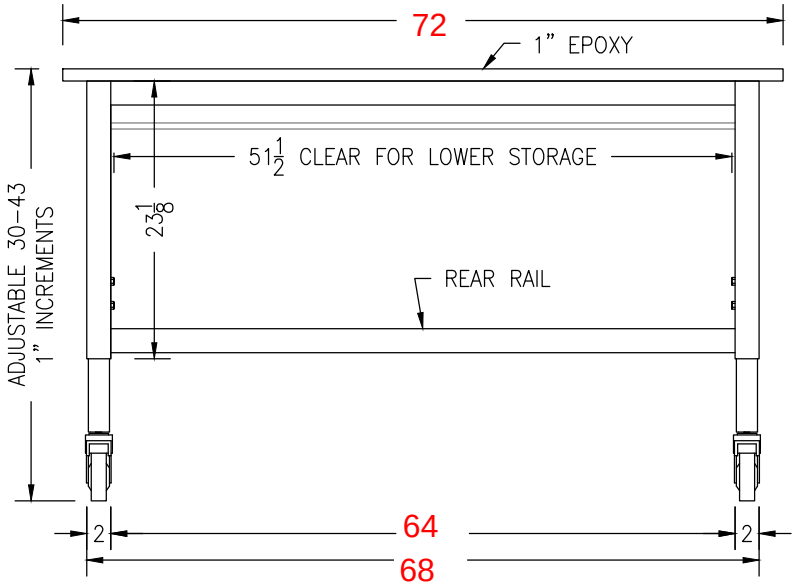

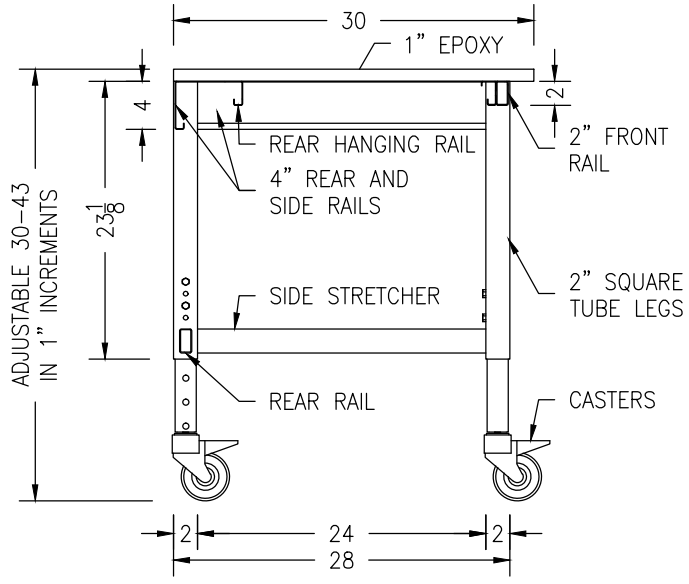

- CONSTRUCTION: PANTED STEEL FULLY WELDED FRAME WITH STAINLESS STEEL DUAL BOLTED LEG INSERTS FOR ADJUSTMENT
- ADJUSTMENT: TABLES ADJUST IN 1" INCREMENTS
  - LEVELING FEET: 25-38" INCLUDING 1" COUNTERTOP
  - CASTERS: 30-43" INCLUDING 1" COUNTERTOP
- MOBILITY: BOTH LEVELING FEET AND CASTERS ARE INCLUDED
- LOWER STORAGE FLEXIBILITY: HANGING RAILS SUPPORT UNDER WORKSURFACE COMPONENTS (SOLD SEPARATELY)
- UPPER FLEXIBILITY: OPTIONAL SHELVING SYSTEM (SOLD SEPARATELY) BOLTS TO REAR TABLE LEGS (ADDING 1.625" DEPTH)
- WEIGHT CAPACITY: 1000 LBS EVENLY DISTRIBUTED ON FRAME FOR SUPPORTING THE WORK SURFACE, LOWER STORAGE, AND BENCH TOP EQUIPMENT
- 1" THICK (72" WIDE X 30" DEEP) BLACK EPOXY WORKSURFACE INCLUDED
- WORKSURFACE HAS A 2" OVERHANG AT THE FRONT AND SIDES AND IS FLUSH WITH THE BACK FOR ADDING FUTURE OVERHEAD ACCESSORIES

* CASTER SWIVEL MAY INTERFERE WITH SUSPENDED CABINETS AT LOWER TABLE HEIGHT ADJUSTMENTS

NEL direct
online industrial & laboratory furniture
F 888.635.2949 | www.newenglandlabdirect.com

TOD3060 - 2 OF 2

08/05/16

* DISCLAIMER: THIS DOCUMENT IS INTENDED FOR GENERAL INFORMATION ONLY. CHANGES MAY OCCUR WITHOUT NOTICE AT THE DISCRETION OF NEW ENGLAND LAB DIRECT

30"X60" CAMBRIDGE Q SERIES LAB TABLE WITH 1" BLACK EPOXY TOP

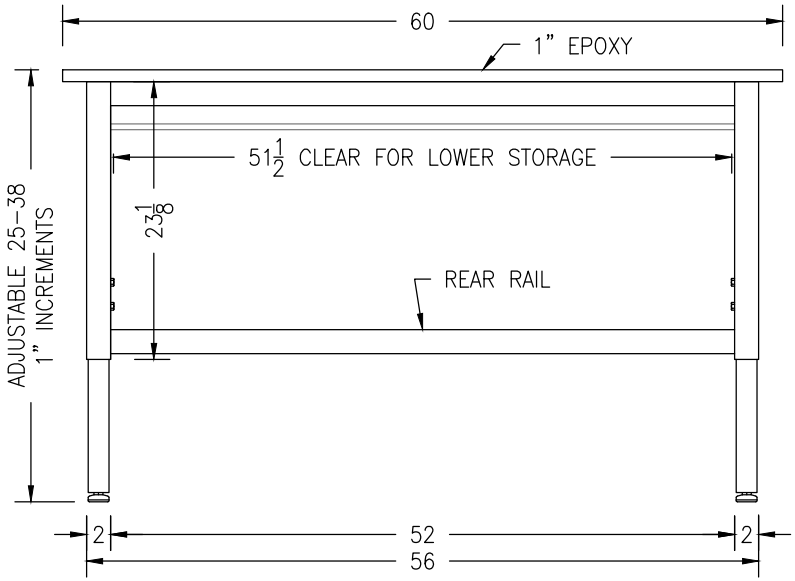

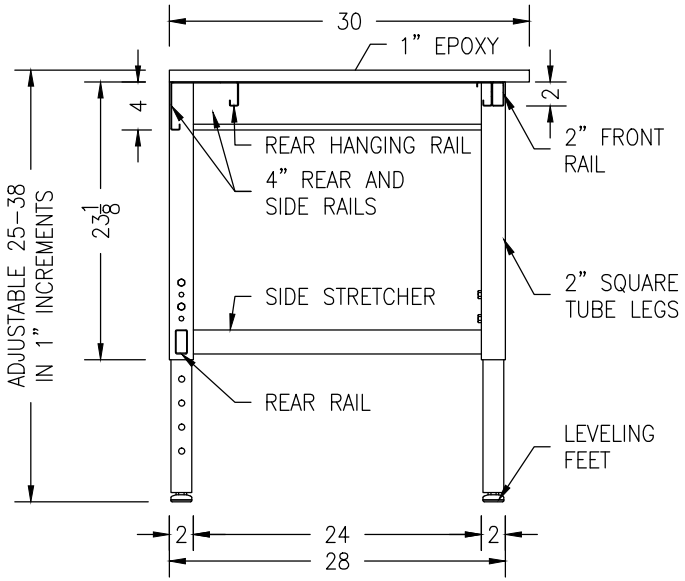

*CASTERS SHIPPED LOOSE FOR FUTURE USE

- CONSTRUCTION: PAINTED STEEL FULLY WELDED FRAME WITH STAINLESS STEEL DUAL BOLTED LEG INSERTS FOR ADJUSTMENT
- ADJUSTMENT: TABLES ADJUST IN 1" INCREMENTS
  - LEVELING FEET: 25-38" INCLUDING 1" COUNTERTOP
  - CASTERS: 30-43" INCLUDING 1" COUNTERTOP
- MOBILITY: BOTH LEVELING FEET AND CASTERS ARE INCLUDED
- LOWER STORAGE FLEXIBILITY: HANGING RAILS SUPPORT UNDER WORKSURFACE COMPONENTS (SOLD SEPARATELY)
- UPPER FLEXIBILITY: OPTIONAL SHELVING SYSTEM (SOLD SEPARATELY) BOLTS TO REAR TABLE LEGS (ADDING 1.625" DEPTH)
- WEIGHT CAPACITY: 1000 LBS EVENLY DISTRIBUTED ON FRAME FOR SUPPORTING THE WORK SURFACE, LOWER STORAGE, AND BENCH TOP EQUIPMENT
- 1" THICK (60" WIDE X 30" DEEP) BLACK EPOXY WORKSURFACE INCLUDED
- WORKSURFACE HAS A 2" OVERHANG AT THE FRONT AND SIDES AND IS FLUSH WITH THE BACK FOR ADDING FUTURE OVERHEAD ACCESSORIES

* CASTER SWIVEL MAY INTERFERE WITH SUSPENDED CABINETS AT LOWER TABLE HEIGHT ADJUSTMENTS

NEL direct
online industrial & laboratory furniture
F 888.635.2949 | www.newenglandlabdirect.com

* DISCLAIMER: THIS DOCUMENT IS INTENDED FOR GENERAL INFORMATION ONLY. CHANGES MAY OCCUR WITHOUT NOTICE AT THE DISCRETION OF NEW ENGLAND LAB DIRECT